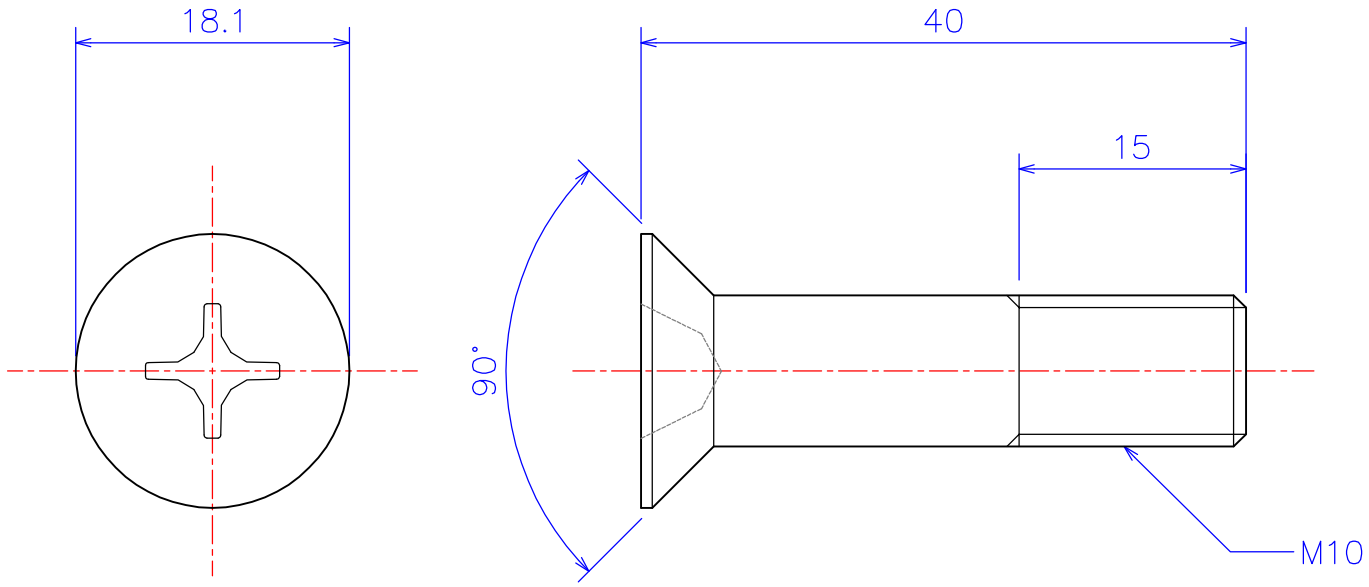

Method	Model ID / Item ASM10-40 Flat Head Screw M10x40L Alumina Al_2O_3
Scale 2 : 1 (A4)	Model ID / Item
Drawn W.O. 2011.03.02	
	KDA Corporation 4-13-6 Nakarokugo Ohta-ku TOKYO 144-0055 JAPAN