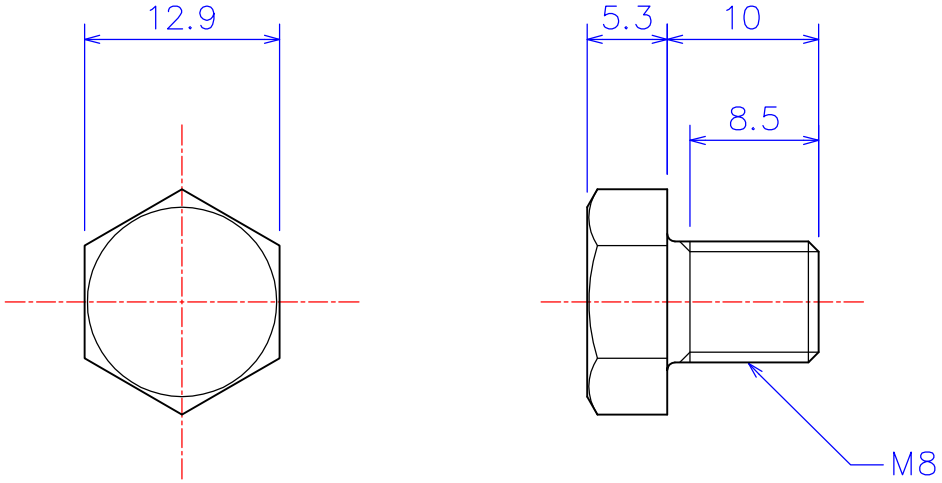

Method	Model ID / Item: ARM08-10 — Hexagon Head Screw [Bolt] M8x10L, Alumina Al_2O_3
Scale: 2 : 1 (A4)	Model ID / Item
Drawn: W.O. 2011.03.02	
	KDA Corporation
	4-13-6 Nakarokugo Ohta-ku TOKYO 144-0055 JAPAN