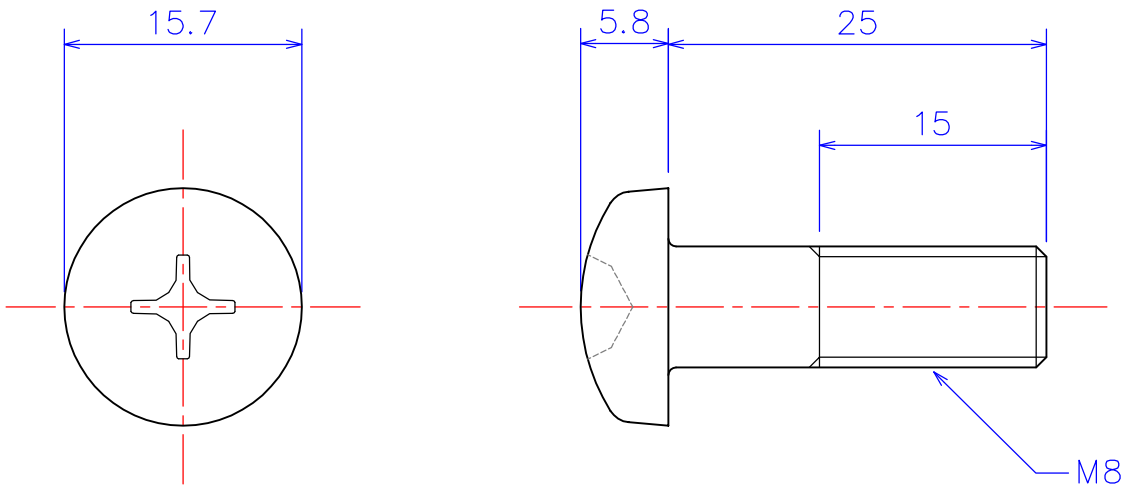

Method	Model ID / Item: ANM08-25 — Pan Head Screw M8x25L, Alumina Al_2O_3
Scale: 2 : 1 (A4)	Model ID / Item
Drawn: W.O. 2011.11.11	
	KDA Corporation 4-13-6 Nakarokugo Ohta-ku TOKYO 144-0055 JAPAN