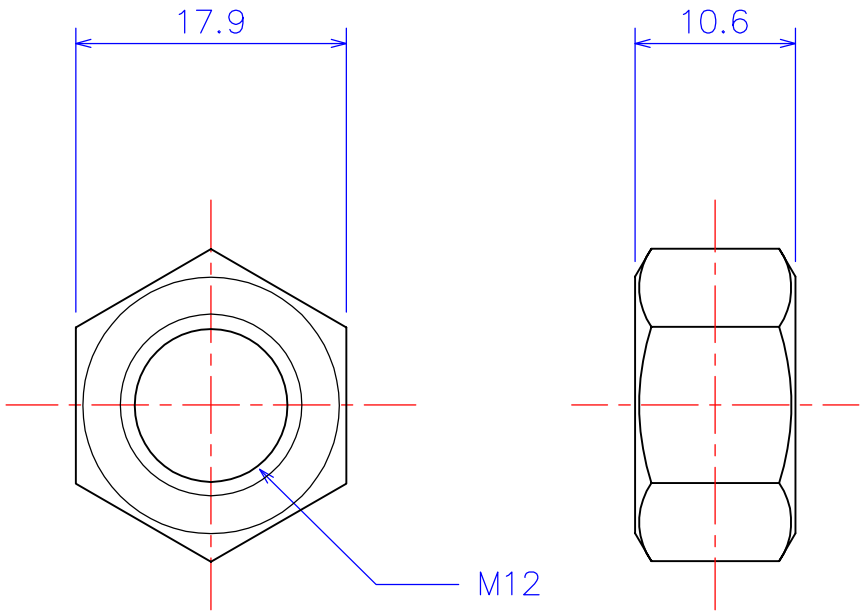


| | |
|---|---|
| Method | Model ID / Item<br>ARNM12-10.6 Hexagon Nut M12x10.6t<br>Alumina $Al_2O_3$ |
| Scale 2 : 1 (A4) | Model ID / Item |
| Drawn W.O. 2011.11.21 | |
| | KDA Corporation<br>4-13-6 Nakarokugo Ohta-ku TOKYO 144-0055 JAPAN |