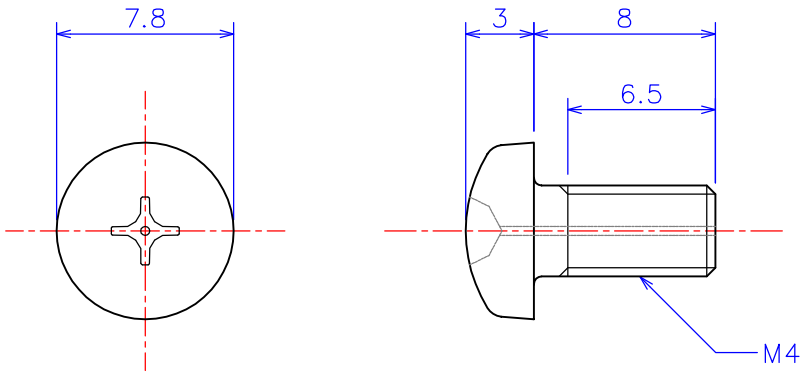

* Notes: Products' hole diameter and the position are rougth.

Method	Model ID / Item ANSHM04-08	Pan Head gas hole Screw M4x8L Alumina Al_2O_3
Scale 3 : 1 (A4)	Model ID / Item ZNSHM04-08	Pan Head gas hole Screw M4x8L Zirconia ZrO_2
Drawn W.O. 2011.11.17		
	KDA Corporation	
	4-13-6 Nakarokugo Ohta-ku TOKYO 144-0055 JAPAN	